该文档是极速PDF编辑器生成,
如果想去掉该提示,请访问并下载:
http://www.jisupdfeditor.com/

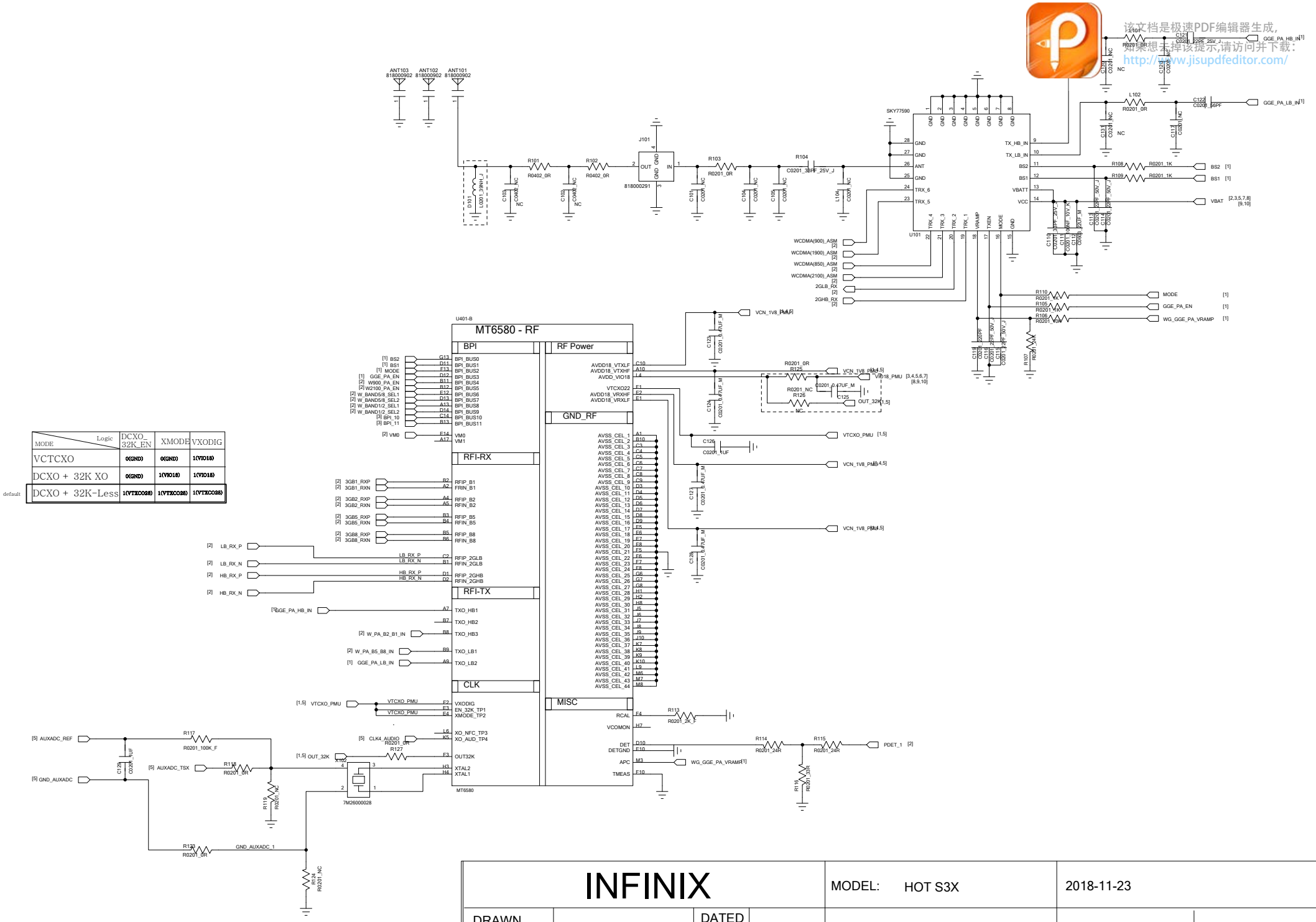

MODE \ Logic	DCXO_32K_EN	XMODE	VXODIG
VCTCXO	0(GND)	0(GND)	1(VIO18)
DCXO + 32K XO	0(GND)	1(VIO18)	1(VIO18)
default DCXO + 32K-Less	1(VTXCO28)	1(VTXCO28)	1(VTXCO28)

INFINIX	MODEL: HOT S3X	2018-11-23	
DRAWN	DATED	TITLE:	VERSION:
CHECKED	DATED		SHEET: 1

该文档是极速PDF编辑器生成,
如果想去掉该提示,请访问并下载:
http://www.jisupdfeditor.com/

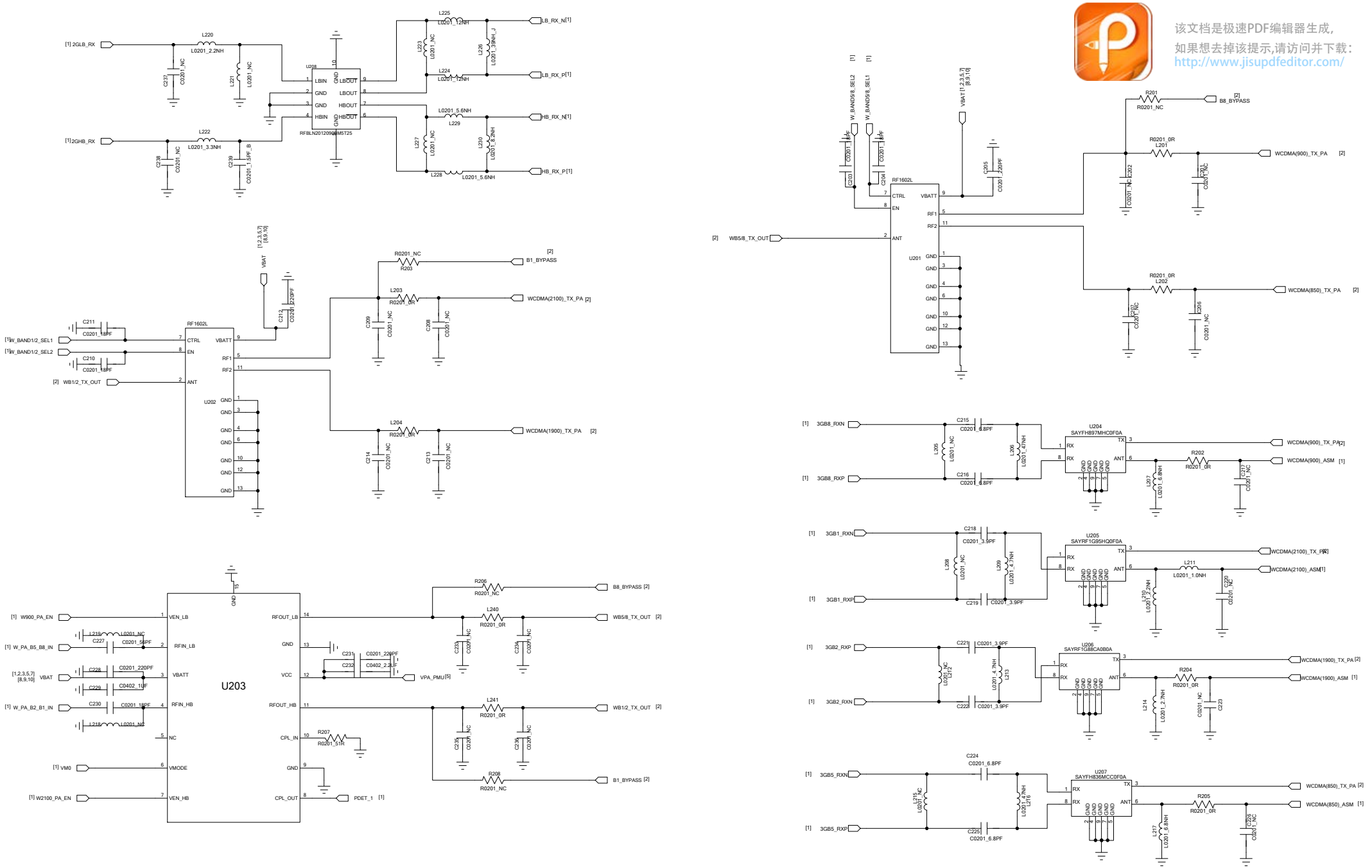

Power MODE	VEN_LB	VEN_HB	VMODE
Shutdown	0	0	0
B1/2 HM	0	1	0
B1/2 LM	0	1	1
B5/8 HM	1	0	0
B5/8 LM	1	0	1

INFINIX			MODEL: HOT S3X	2018-11-23	
DRAWN		DATED			
CHECKED		DATED	TITLE:	VERSION:	SHEET: 2

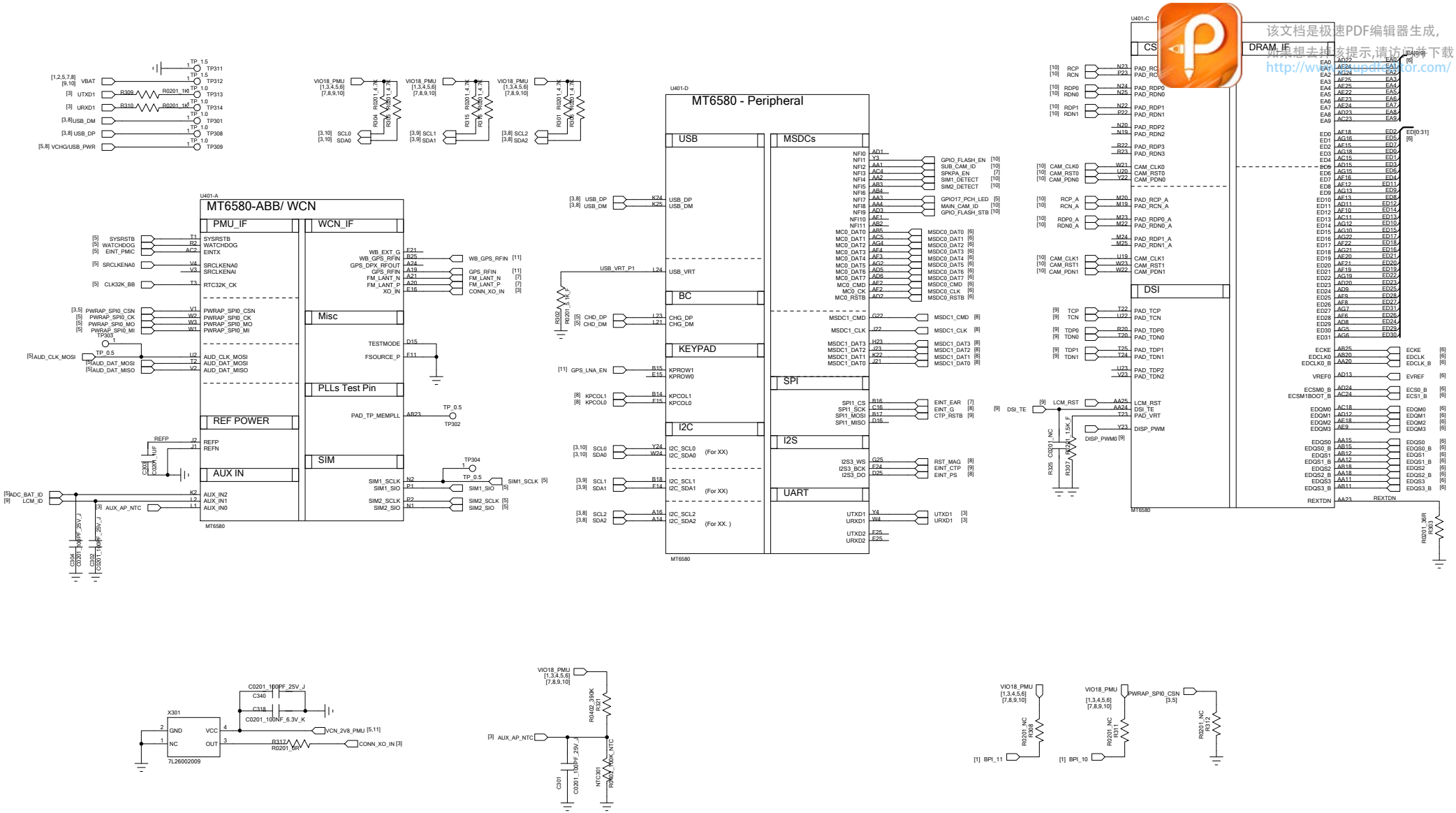

该文档是极速PDF编辑器生成,
如果想去掉该提示,请访问官网下载:
http://www.fastpdfeditor.com/

DP,DM,VCHG,GND,VBAT五个测试点必须和射频座共面

INFINIX				MODEL: HOT S3X	2018-11-23	
DRAWN		DATED		TITLE:	VERSION:	SHEET: 3
CHECKED		DATED				

该文档是极速PDF编辑器生成,
如果想去掉该提示,请访问并下载:
http://www.jisupdfeditor.com/

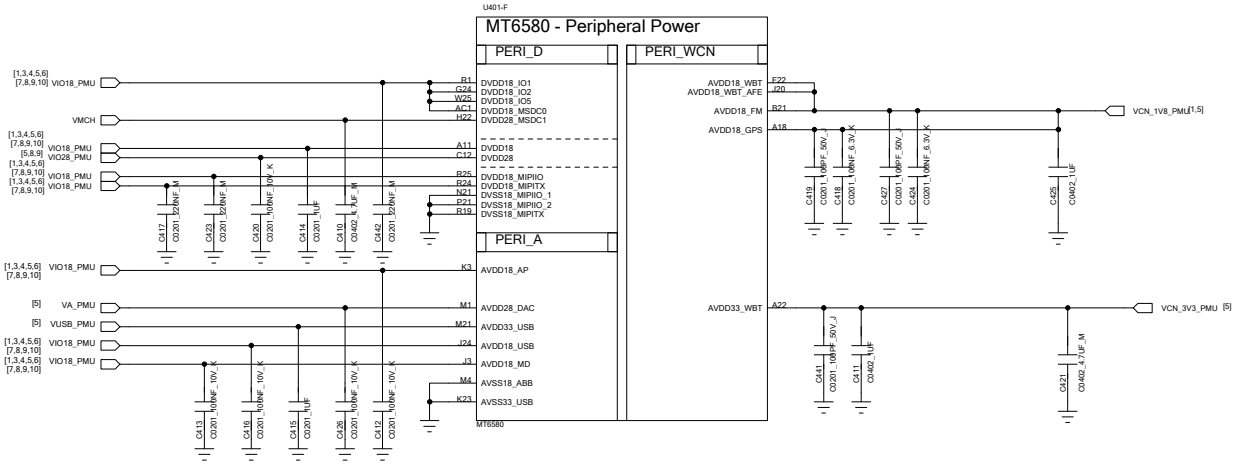

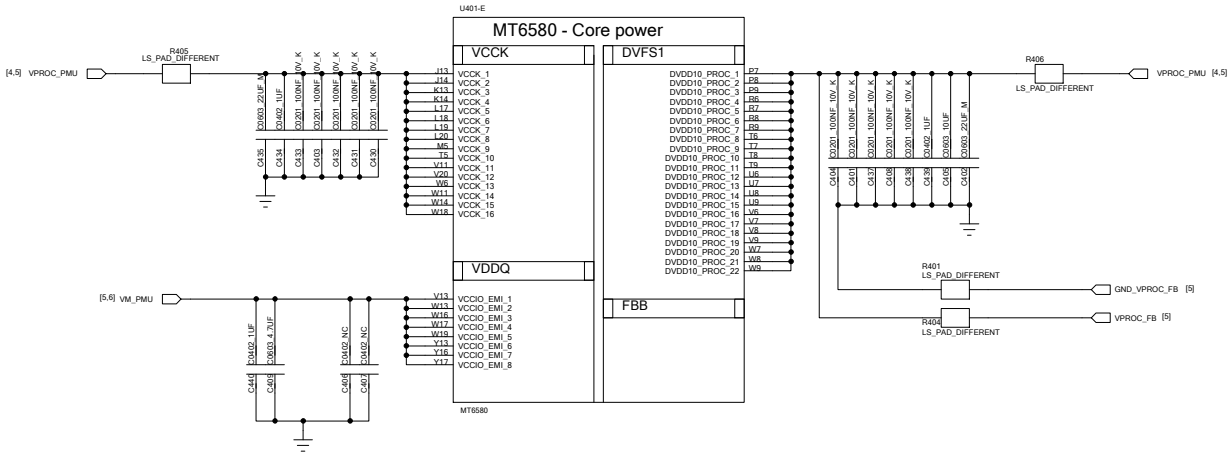

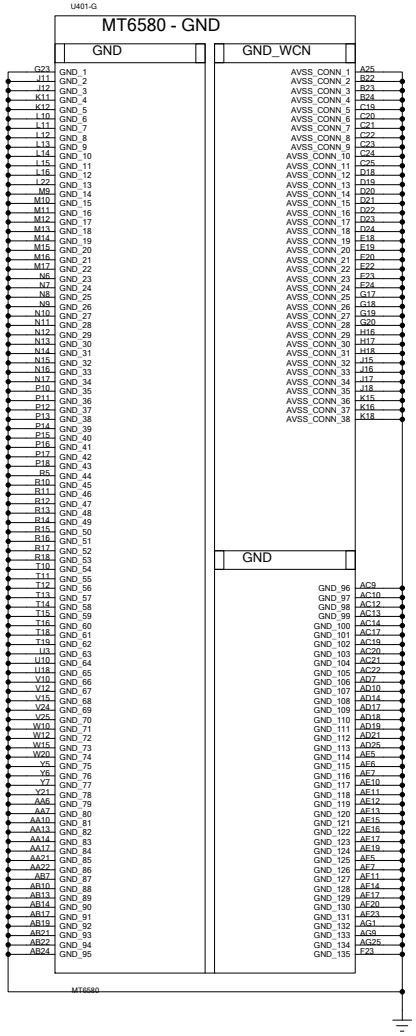

INFINIX			MODEL: ZC452	2018-11-23	
DRAWN		DATED	TITLE:	VERSION:	SHEET: 4
CHECKED		DATED			

PMIC

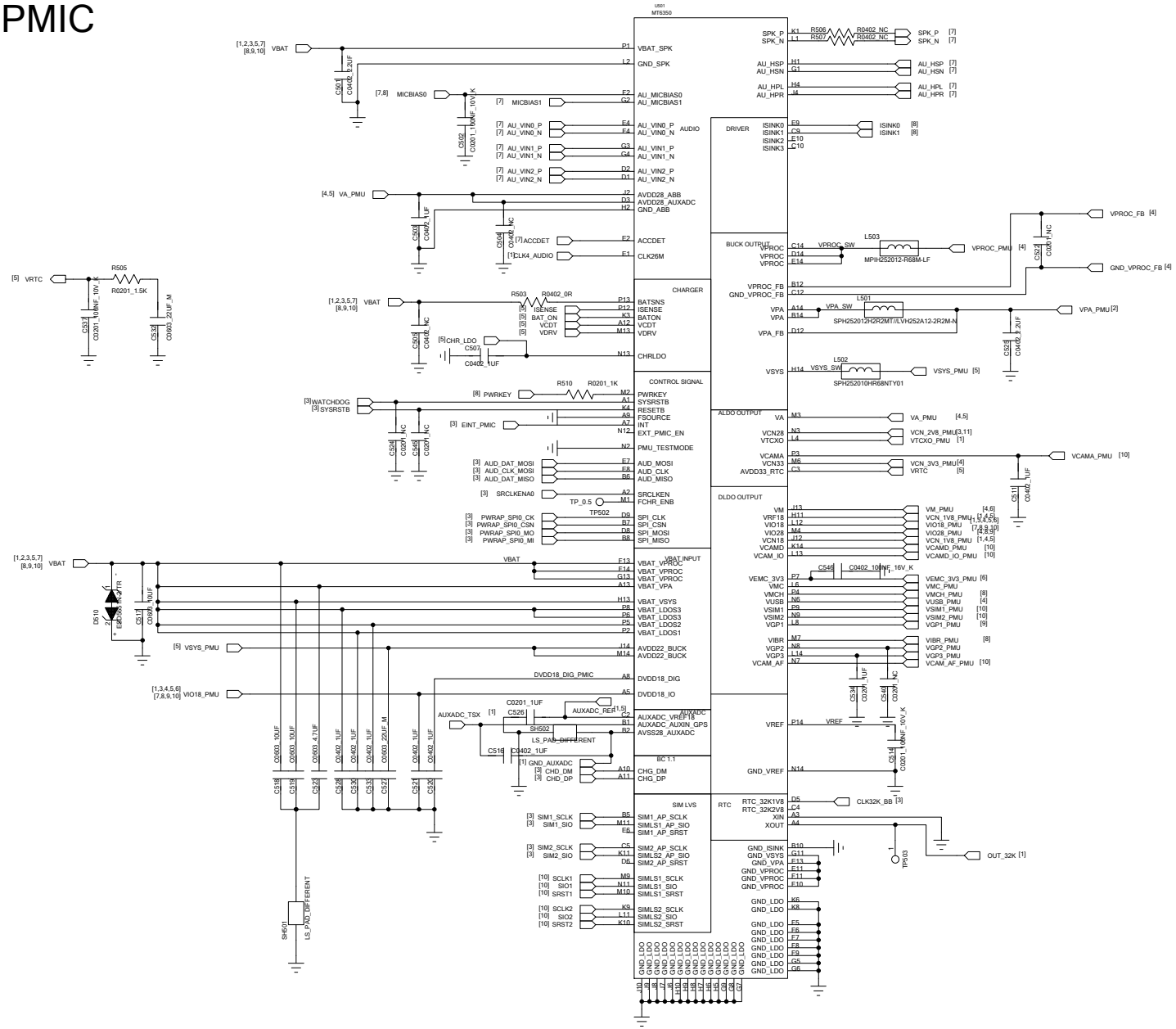
U601
MT6350
VBAT_SPK
GND_SPK
AU_MICBIAS0
AU_MICBIAS1
AU_VIN0_P
AU_VIN0_N
AU_VIN1_P
AU_VIN1_N
AU_VIN2_P
AU_VIN2_N
AVDD28_ABB
AVDD28_AUXADC
GND_ABB
ACCDET
CLK26M
BATSNS
ISENSE
BATON
VCDT
VDRV
CHRLDO
PWRKEY
SYSRSTB
RESETB
FSOURCE
INT
EXT_PMIC_EN
PMU_TESTMODE
AUD_MOSI
AUD_CLK
AUD_MISO
SRCLKEN
FCHR_ENB
SPI_CLK
SPI_CSN
SPI_MOSI
SPI_MISO
VBAT_INPUT
VBAT_VPROC
VBAT_VPROC
VBAT_VPA
VBAT_VSYS
VBAT_LDOS3
VBAT_LDOS3
VBAT_LDOS2
VBAT_LDOS1
AVDD22_BUCK
AVDD22_BUCK
DVDD18_DIG
DVDD18_IO
AUXADC
AUXADC_VREF18
AUXADC_AUXIN_GPS
AVSS28_AUXADC
BC 1.1
CHG_DM
CHG_DP
SIM LVS
SIM1_AP_SCLK
SIM1_AP_SIO
SIM1_AP_SRST
SIM2_AP_SCLK
SIM2_AP_SIO
SIM2_AP_SRST
SIMLS1_SCLK
SIMLS1_SIO
SIMLS1_SRST
SIMLS2_SCLK
SIMLS2_SIO
SIMLS2_SRST
DRIVER
ISINK0
ISINK1
ISINK2
ISINK3
BUCK OUTPUT
VPROC
VPROC_FB
GND_VPROC_FB
VPA
VPA_FB
VSYS
ALDO OUTPUT
VA
VCN28
VTCXO
VCAMA
VCN33
AVDD33_RTC
DLDO OUTPUT
VM
VRF18
VIO18
VIO28
VCN18
VCAMD
VCAM_IO
VEMC_3V3
VMC
VMCH
VUSB
VSIM1
VSIM2
VGP1
VIBR
VGP2
VGP3
VCAM_AF
VREF
GND_VREF
RTC
RTC_32K1V8
RTC_32K2V8
XIN
XOUT
GND_ISINK
GND_VSYS
GND_VPA
GND_VPROC
GND_VPROC
GND_VPROC
GND_LDO
GND_LDO
GND_LDO

该文档是极速PDF编辑器生成,
如果想去掉该提示,请访问并下载:
http://www.jisupdfeditor.com/

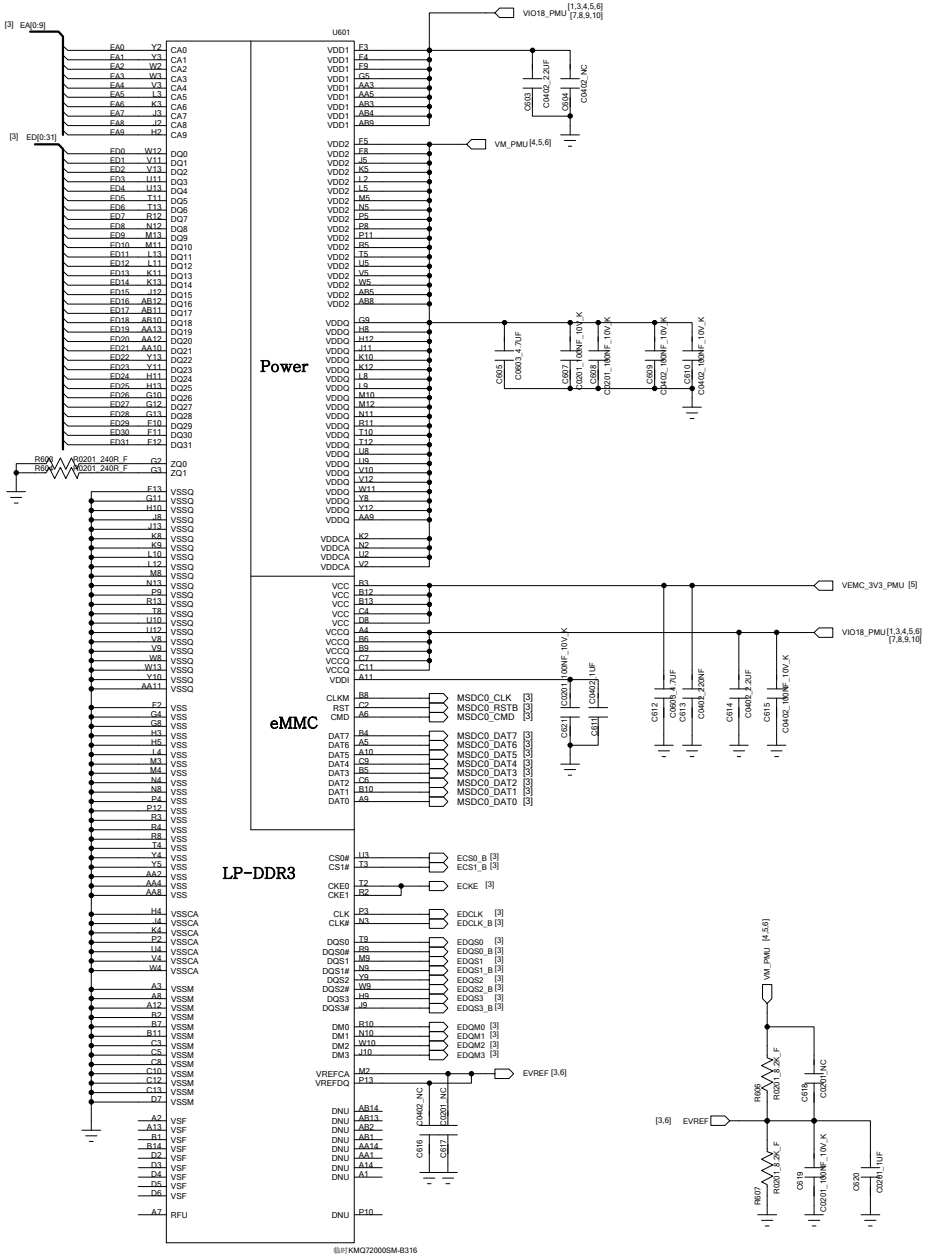

INFINIX			MODEL: HOT S3X	2018-11-23	
DRAWN:		DATED	TITLE:	VERSION:	SHEET: 6
CHECKED		DATED			

该文档是极速PDF编辑器生成,
如果想去掉该提示,请访问并下载:
http://www.jisupdfeditor.com/

RECEIVER

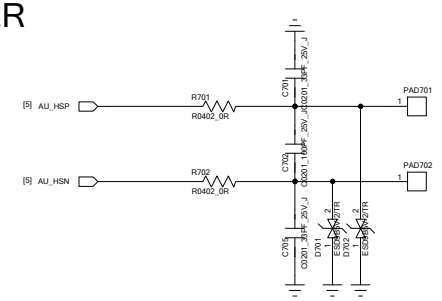

AUDIO PA

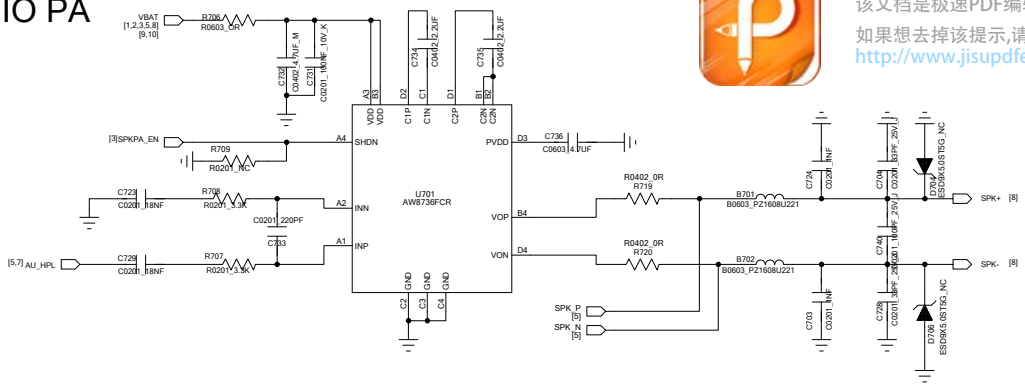

MAIN MIC

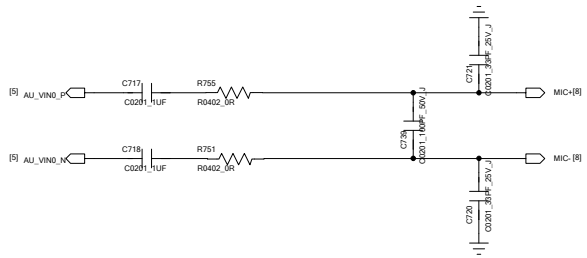

MIC -- Sub

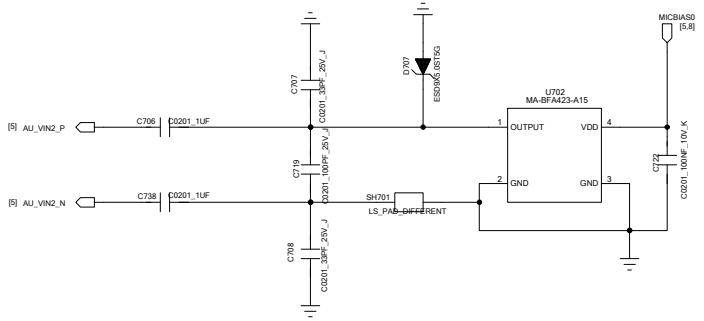

EAR MIC

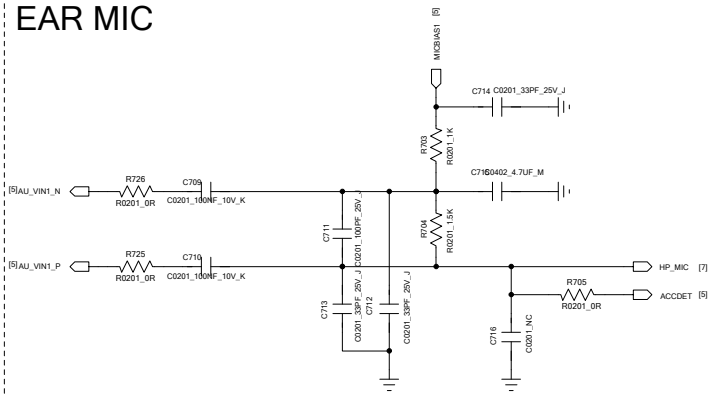

EAR JACK

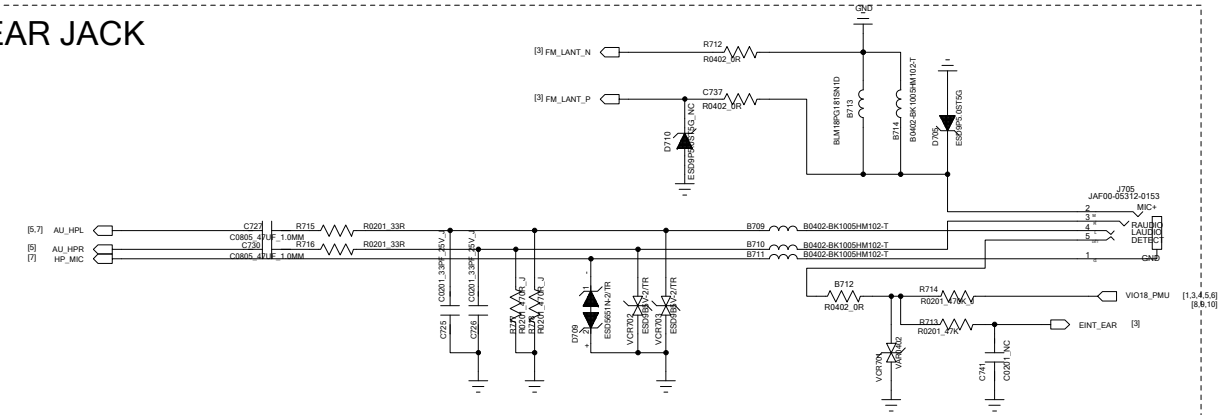

INFINIX			MODEL: HOT S3X	2018-11-23	
DRAWN:		DATED			
CHECKED		DATED	TITLE:	VERSION:	SHEET: 7

该文档是极速PDF编辑器生成,
如果想去掉该提示,请访问并下载:
http://www.jisupdfeditor.com/

ALS&PS

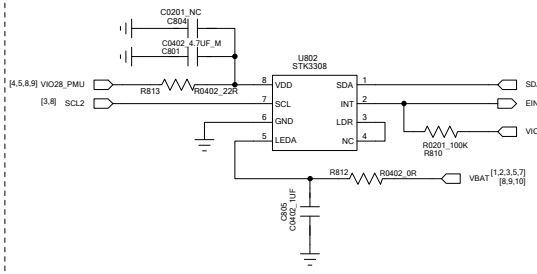

MB<=>UB ZIF

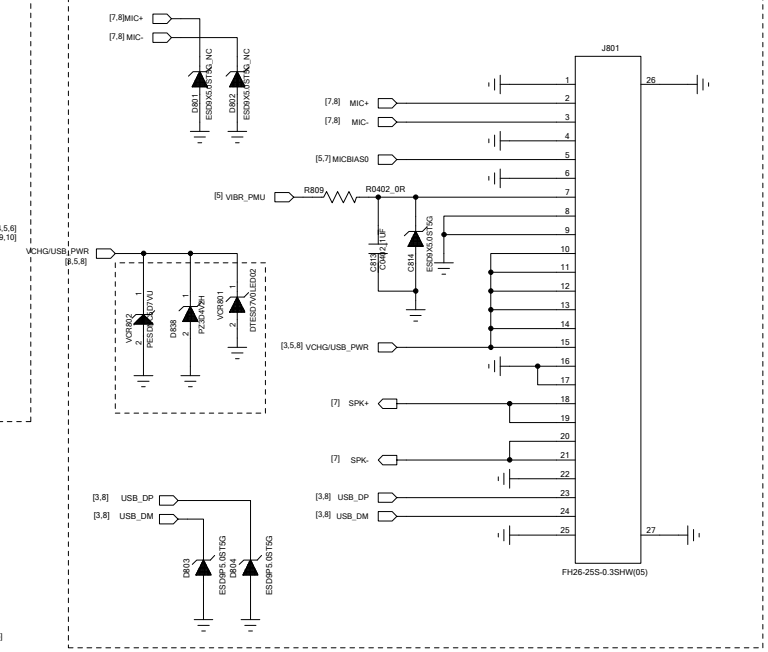

T-Flash

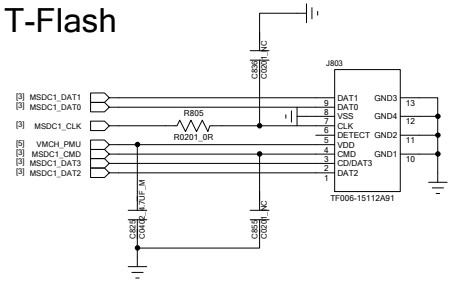

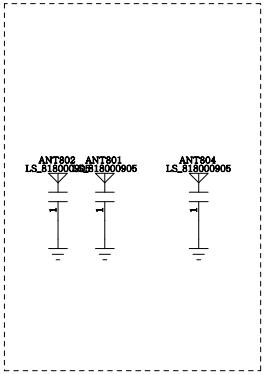

指示灯

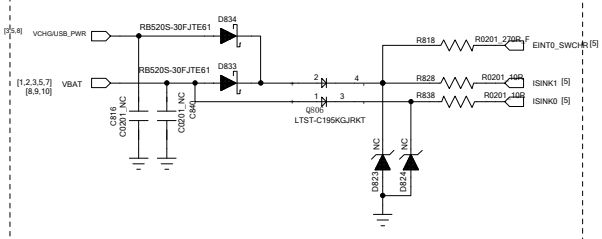

KEY

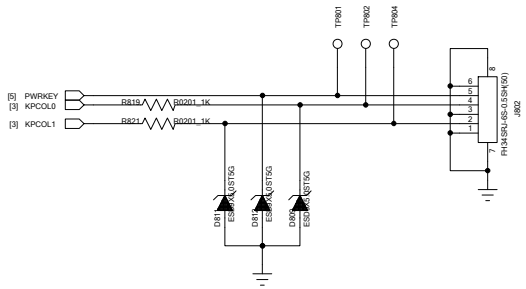

G-sensor

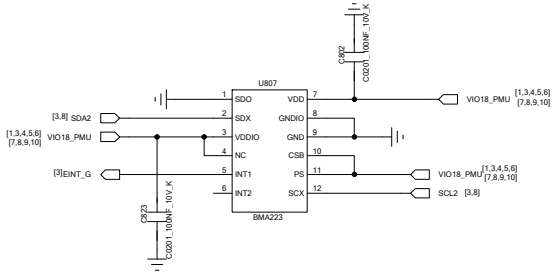

E-compass

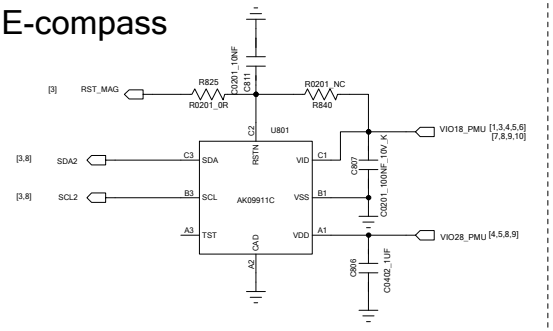

INFINIX				MODEL: HOT S3X	2018-11-23	
DRAWN		DATED		TITLE:	VERSION:	SHEET: 8
CHECKED		DATED				

LCM

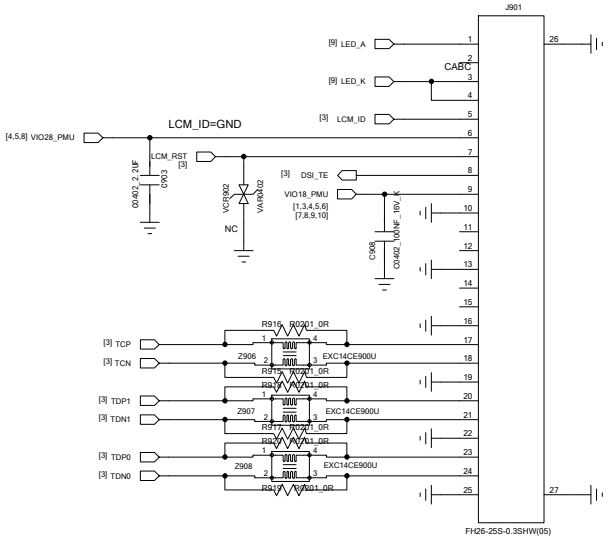

CTP COF Interface

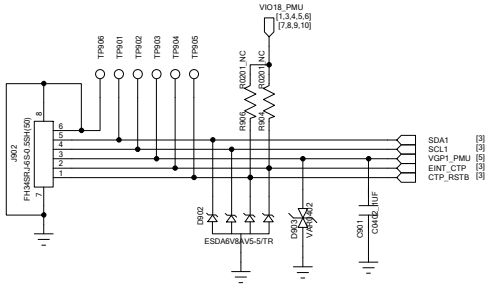

LCD BL Driver

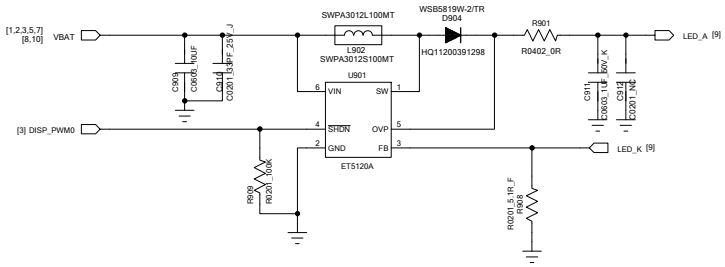

INFINIX			MODEL: HOT S3X	2018-11-23	
DRAWN:		DATED	TITLE:	VERSION:	SHEET: 9
CHECKED		DATED			

该文档是极速PDF编辑器生成,
如果想去掉该提示,请访问并下载:
http://www.jisupdfeditor.com/

该文档是极速PDF编辑器生成,
如果想去掉该提示,请访问并下载:
http://www.jisupdfeditor.com/

Main CAMERA

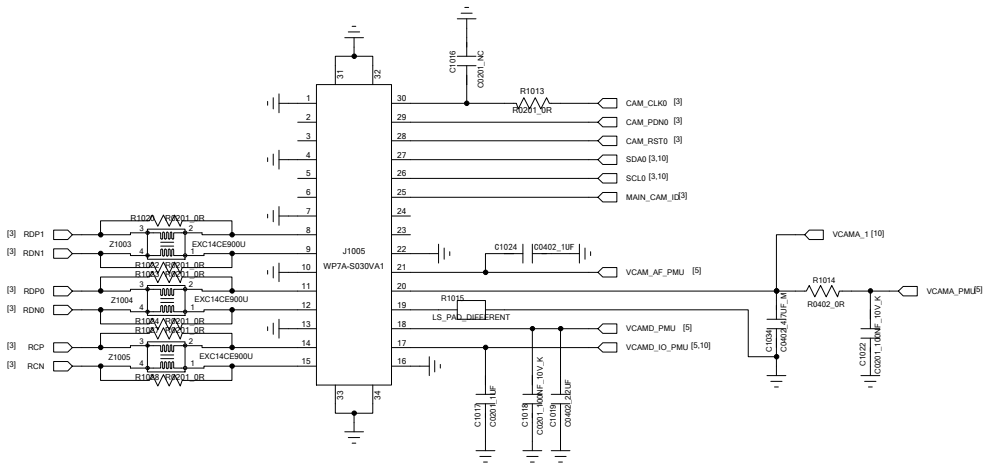

Flash LED Driver

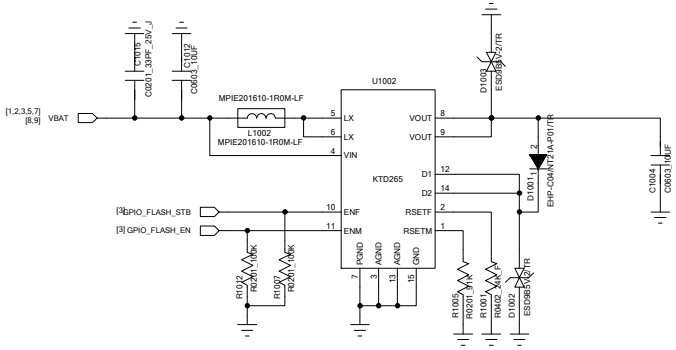

Sub CAMERA

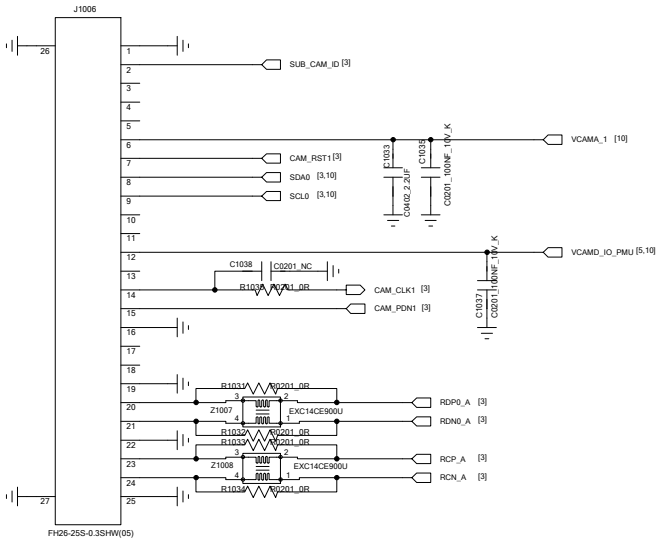

SIM1

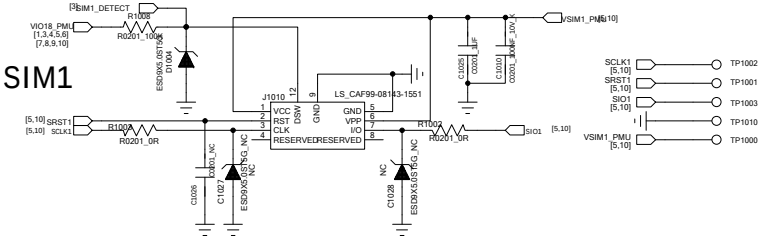

SIM2

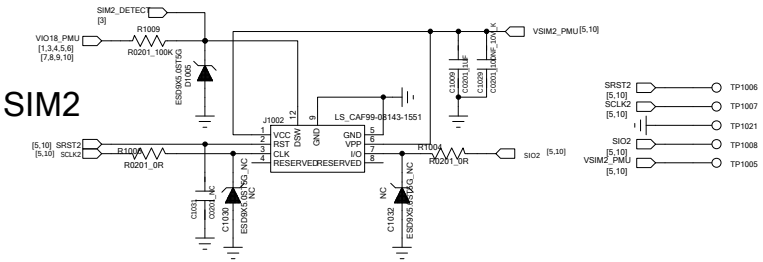

INFINIX			MODEL: HOT S3X	2018-11-23	
DRAWN		DATED	TITLE:	VERSION:	SHEET: 10
CHECKED		DATED			

该文档是极速PDF编辑器生成,
如果想去掉该提示,请访问并下载:
http://www.jisupdfeditor.com/

GPS/BT/WIFI

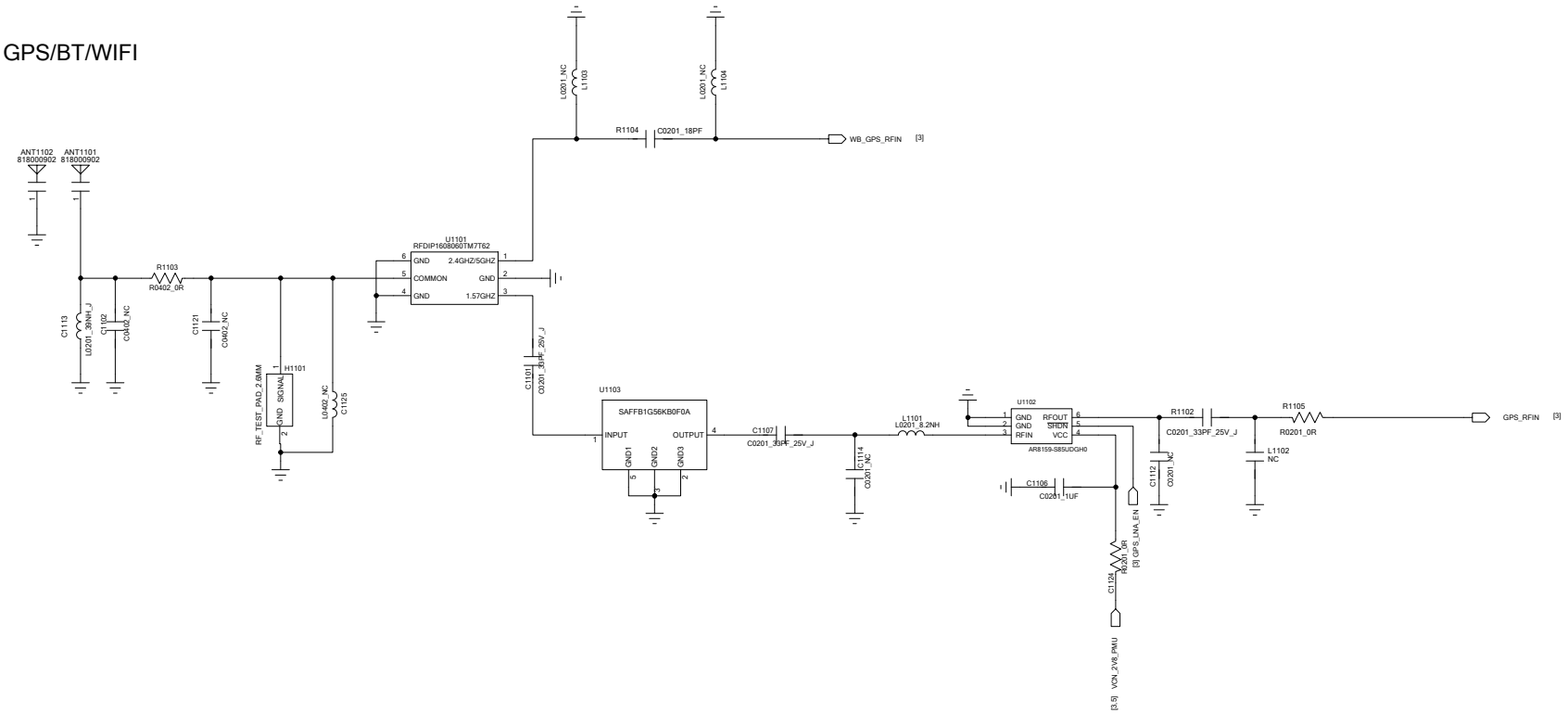

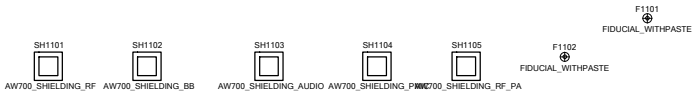

INFINIX			MODEL: HOT S3X	2018-11-23	
DRAWN:		DATED			
CHECKED		DATED	TITLE:	VERSION:	SHEET: 11

该文档是极速PDF编辑器生成,
如果想去掉该提示,请访问并下载:
http://www.jisupdfeditor.com/

INFINIX				MODEL:	2018-11-23	
DRAWN		DATED		TITLE:	VERSION:	SHEET:
CHECKED		DATED				